



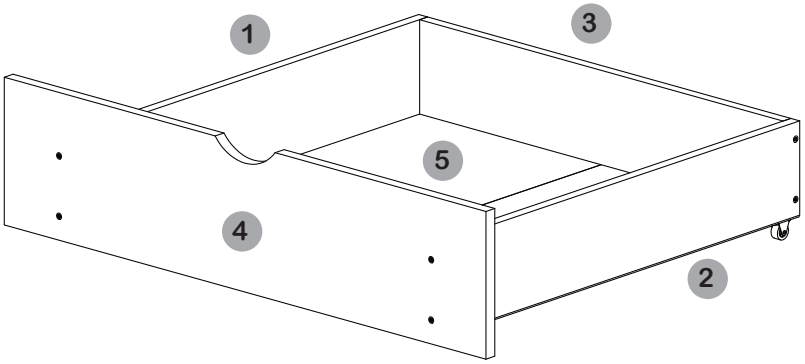



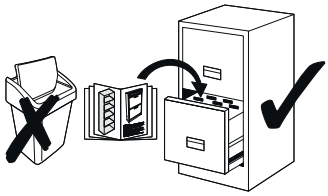

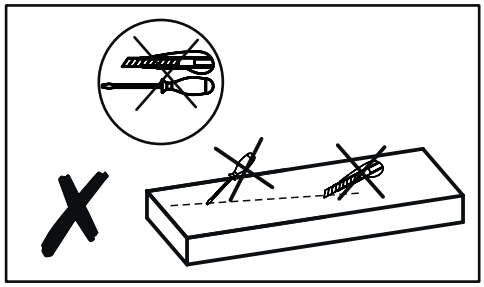

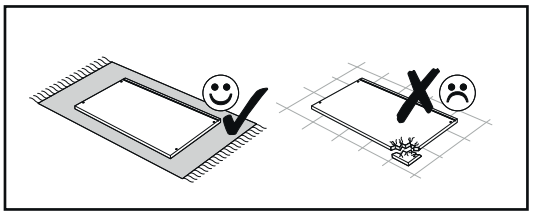

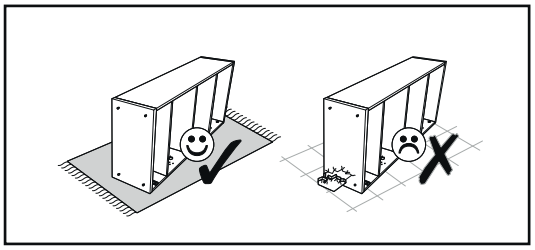

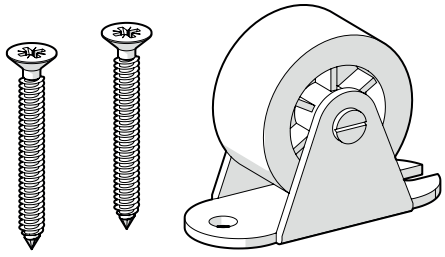

x4

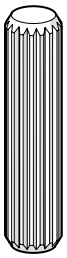

x8

Ø8 x 35 mm



x19

2.5 x 30 mm

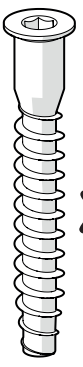

x8

7 x 50 mm

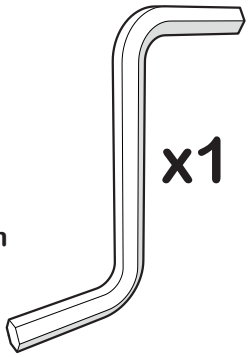

x1

1



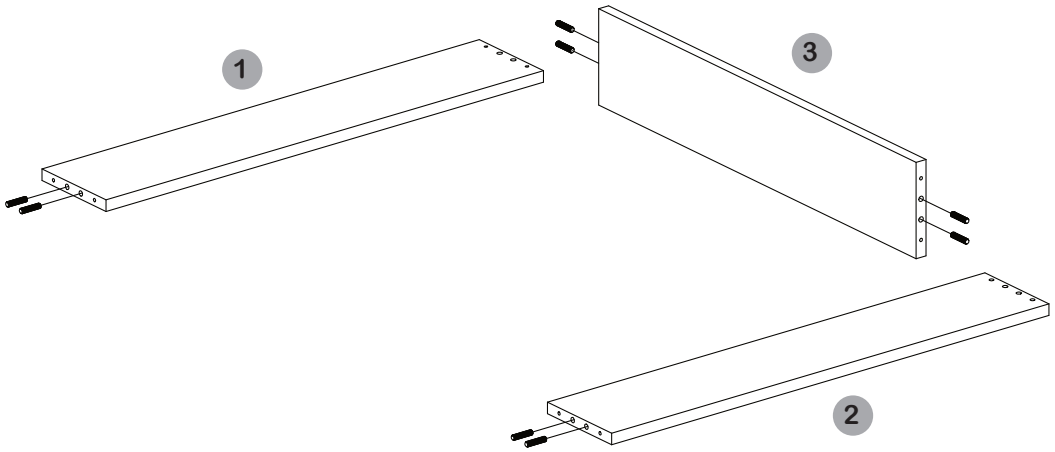

2

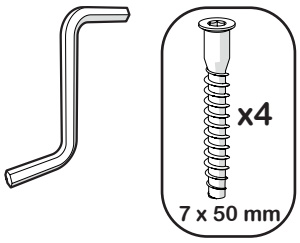

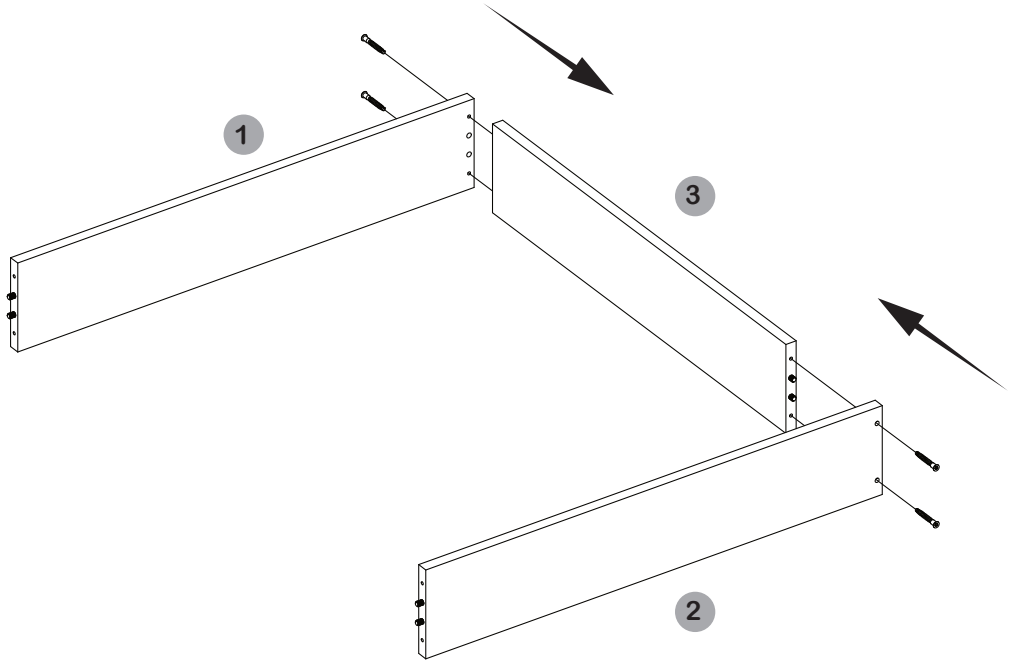

3

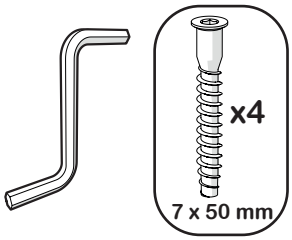

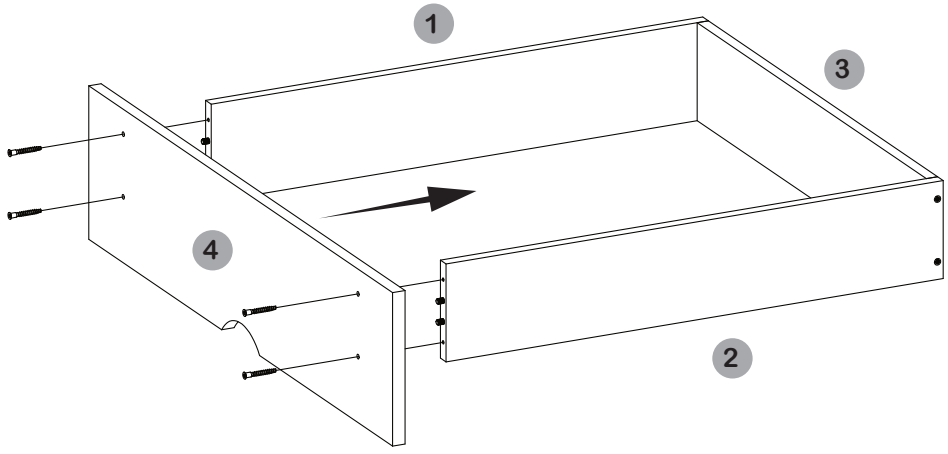

4

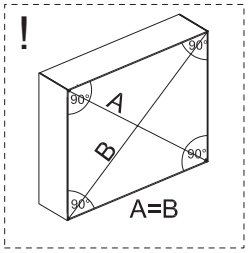

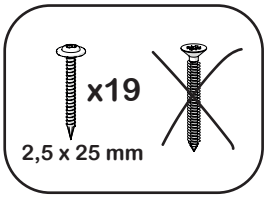

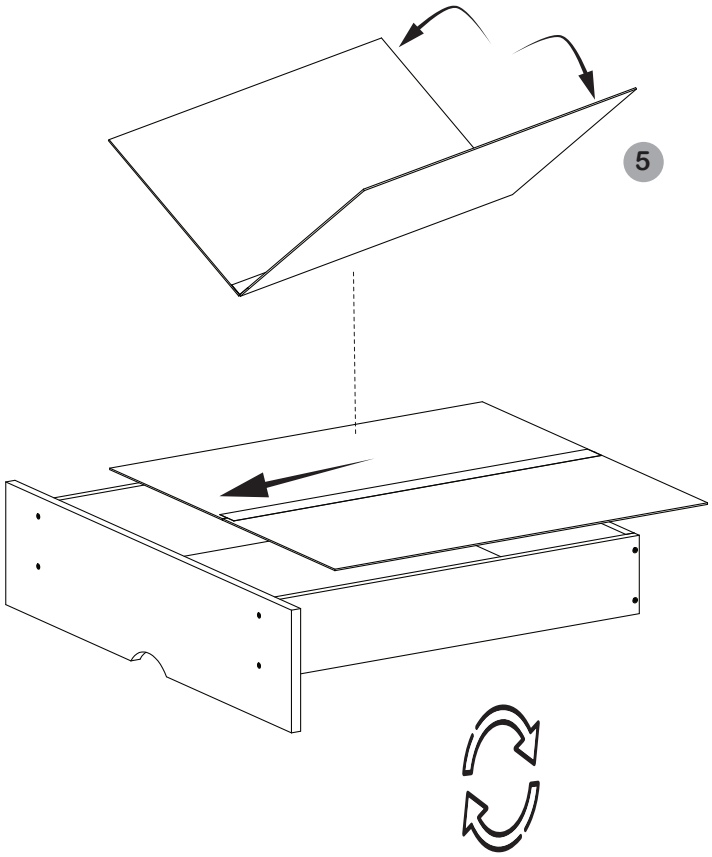

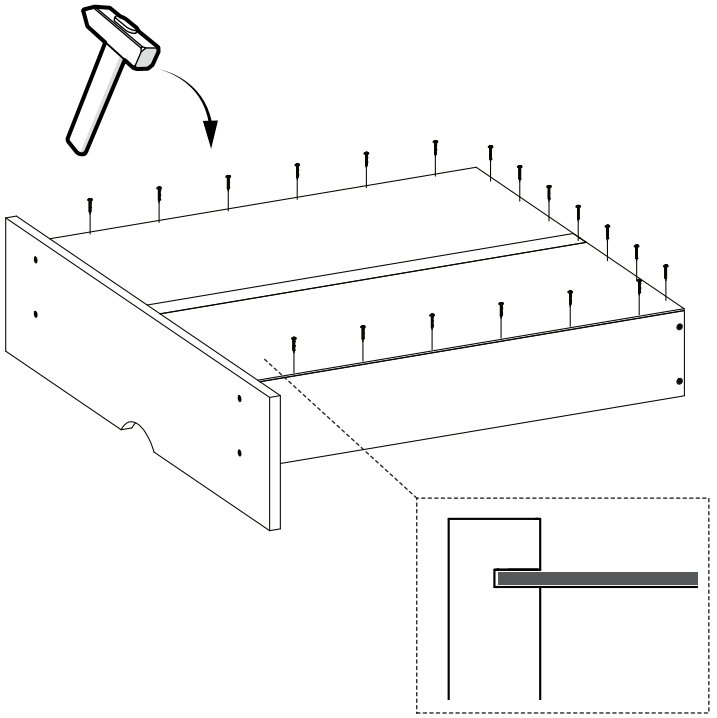

5

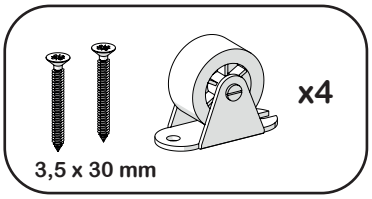

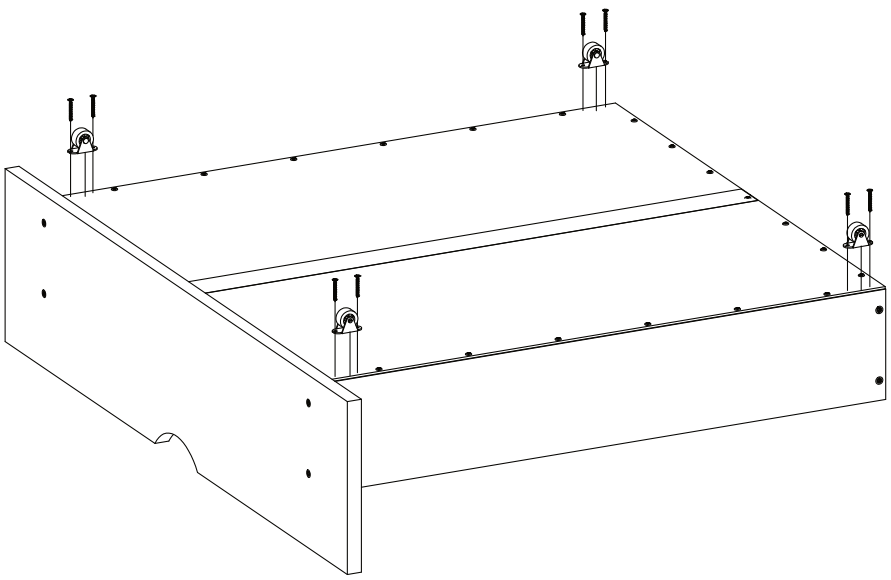

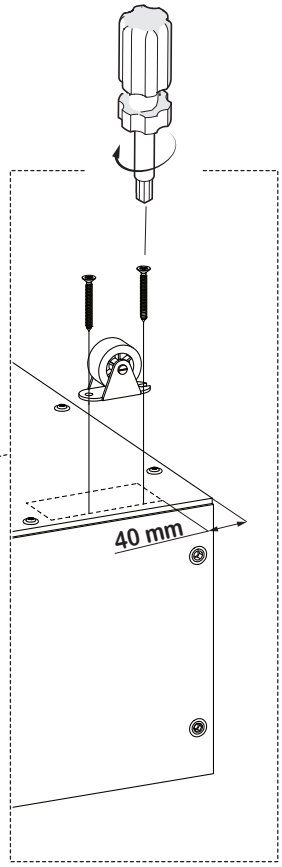



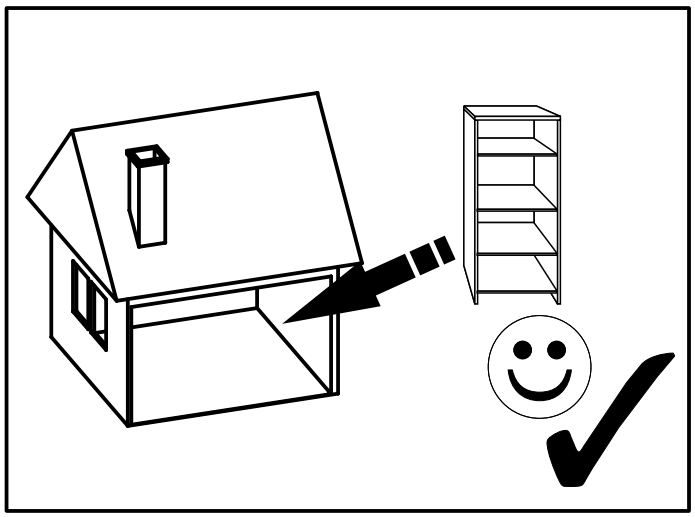

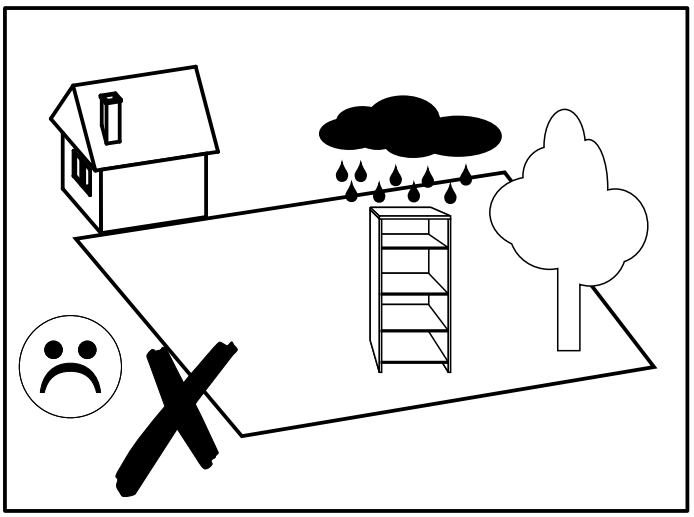

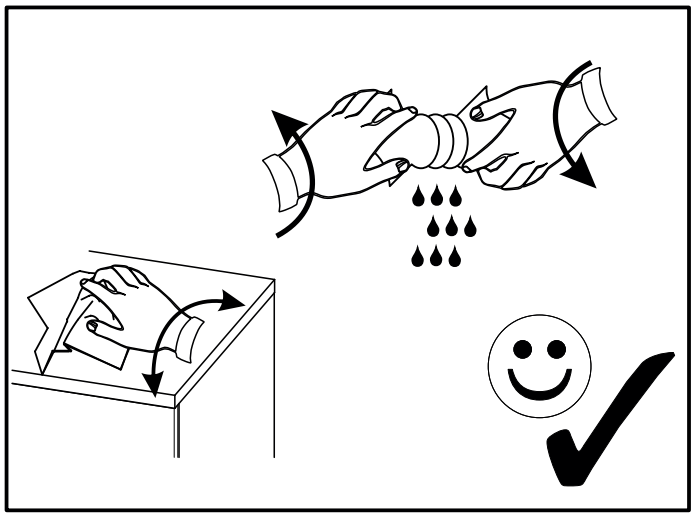

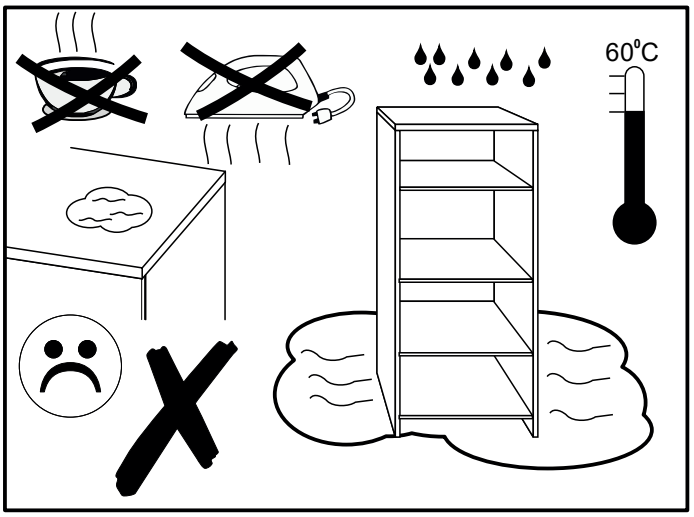
60°C

