Ignaś

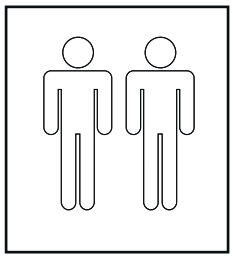



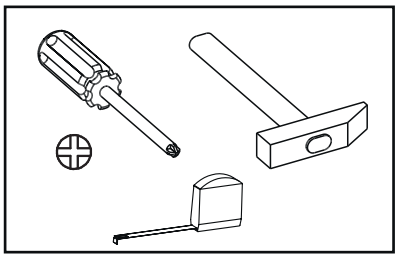



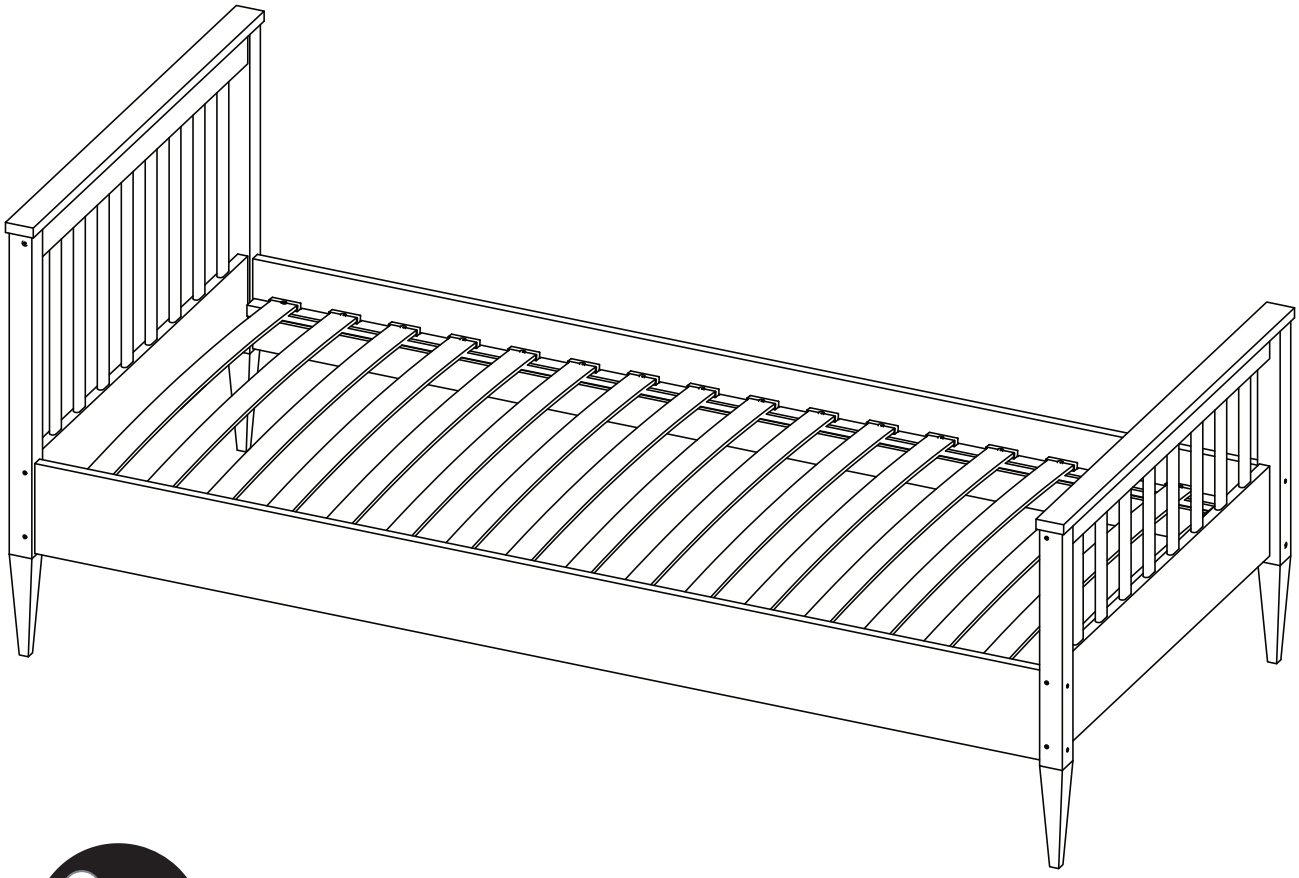



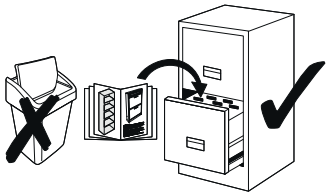

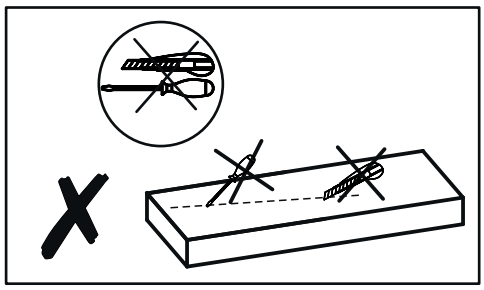

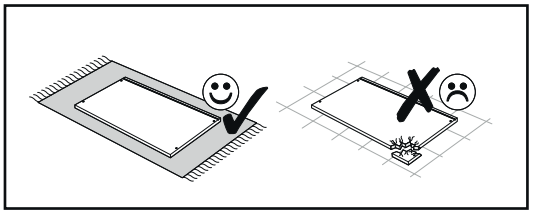

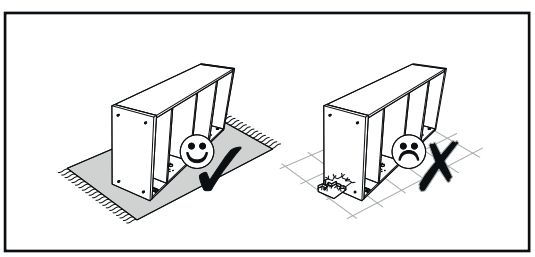

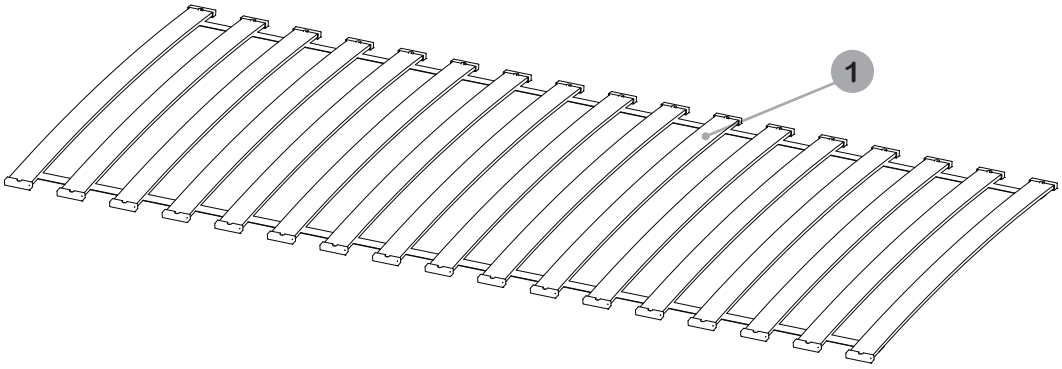
1

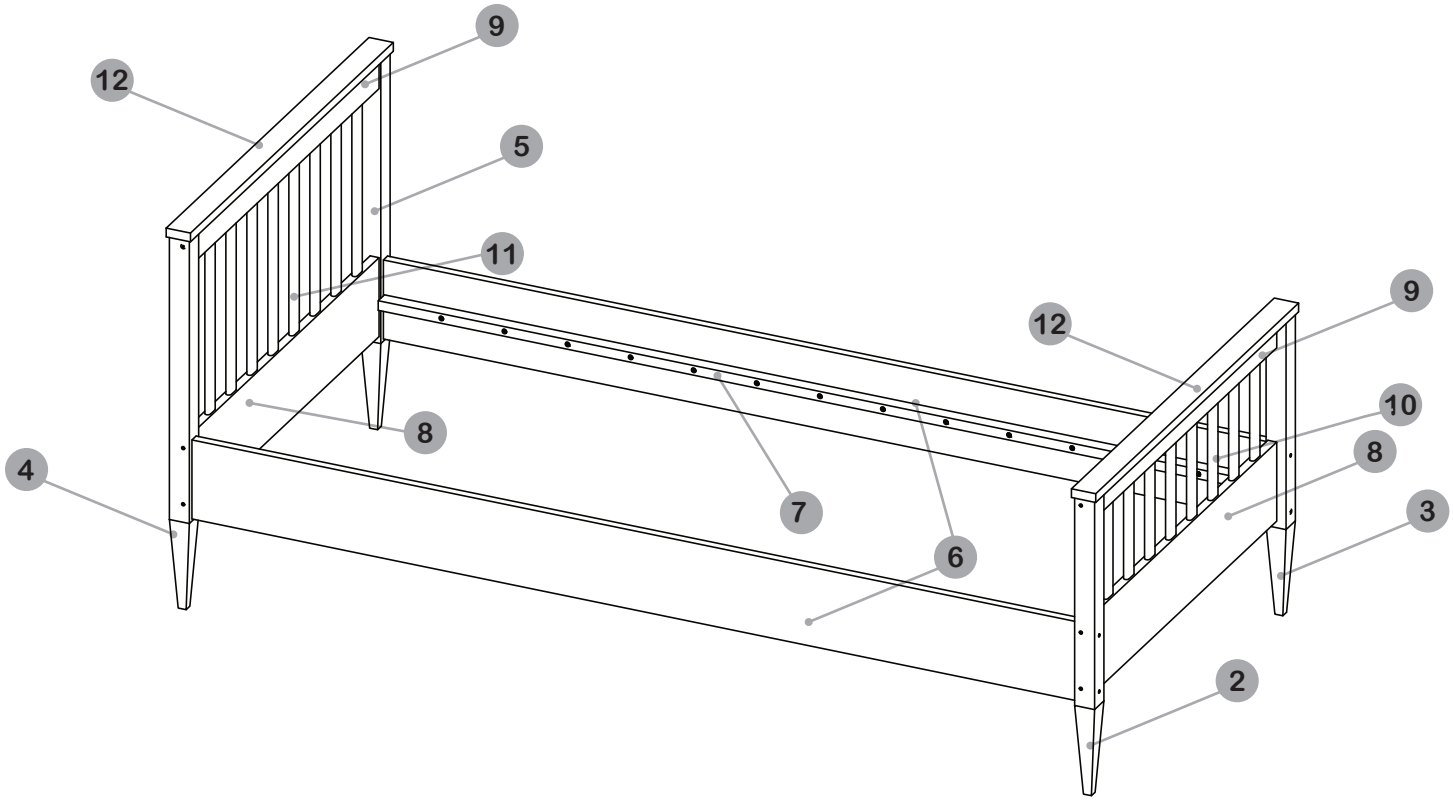
9
12
5
11
12
9
10
8
8
4
7
3
6
2

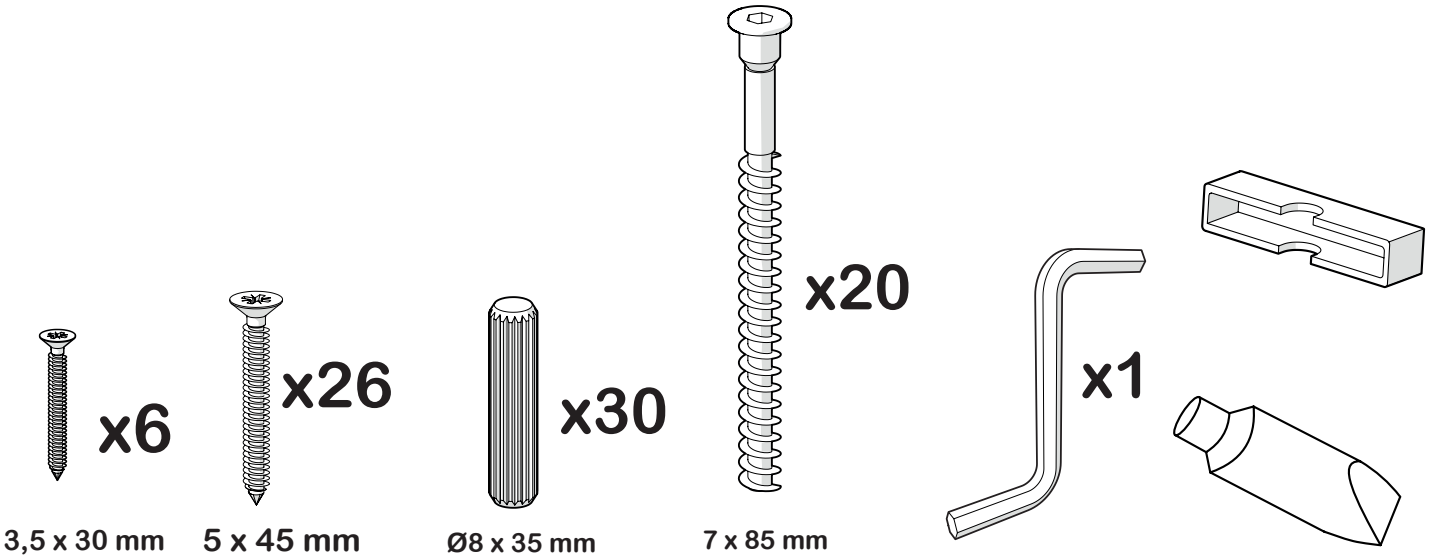
x6
x26
x30
x20
x1
3,5 x 30 mm
5 x 45 mm
Ø8 x 35 mm
7 x 85 mm

1

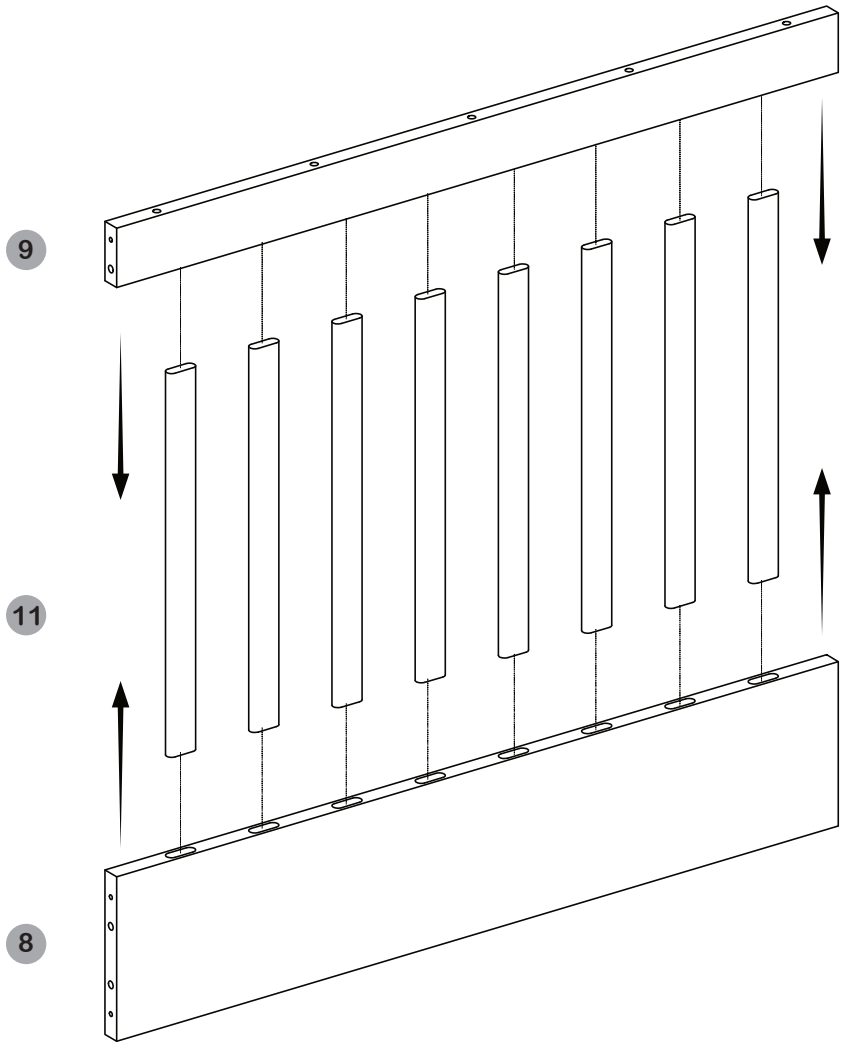

2

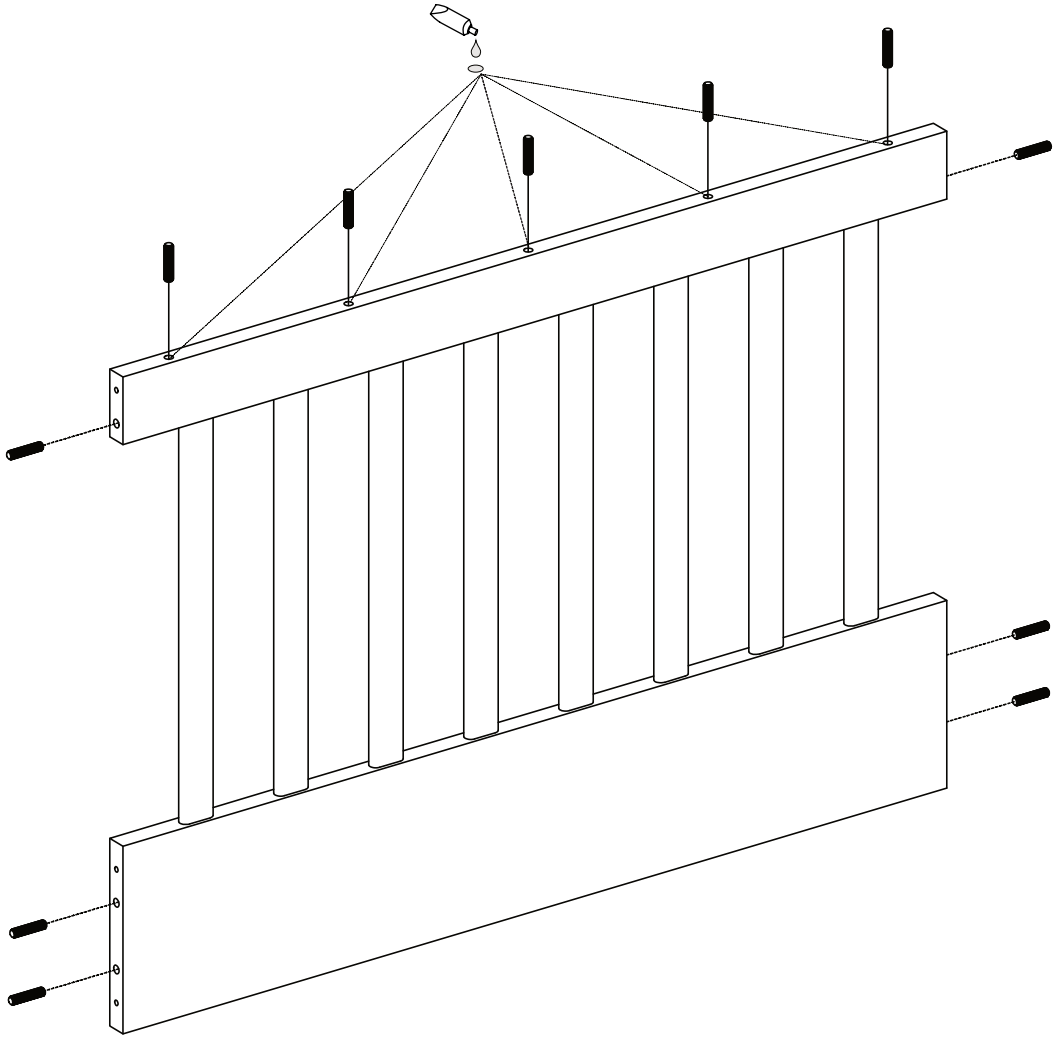

3

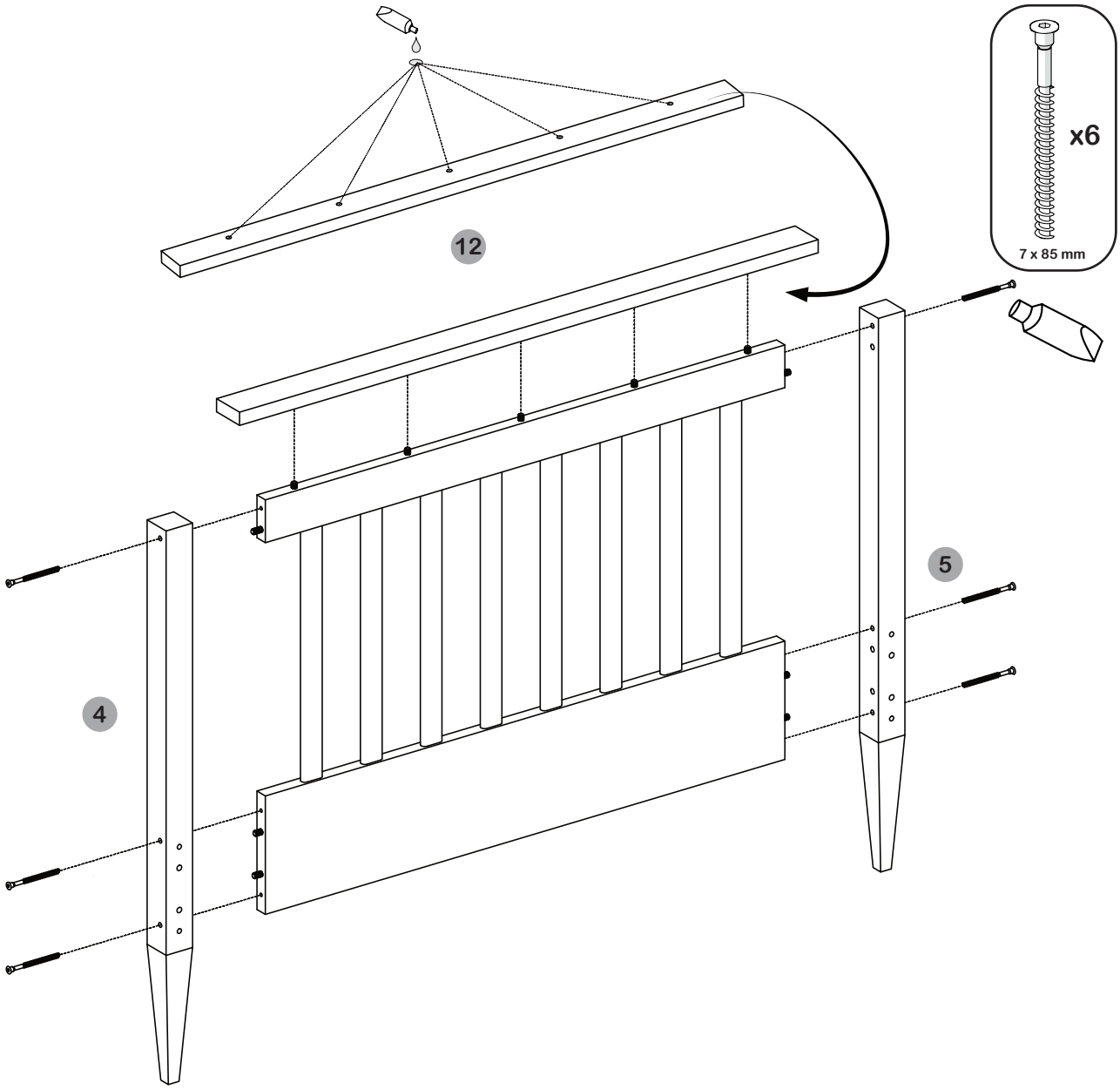

4

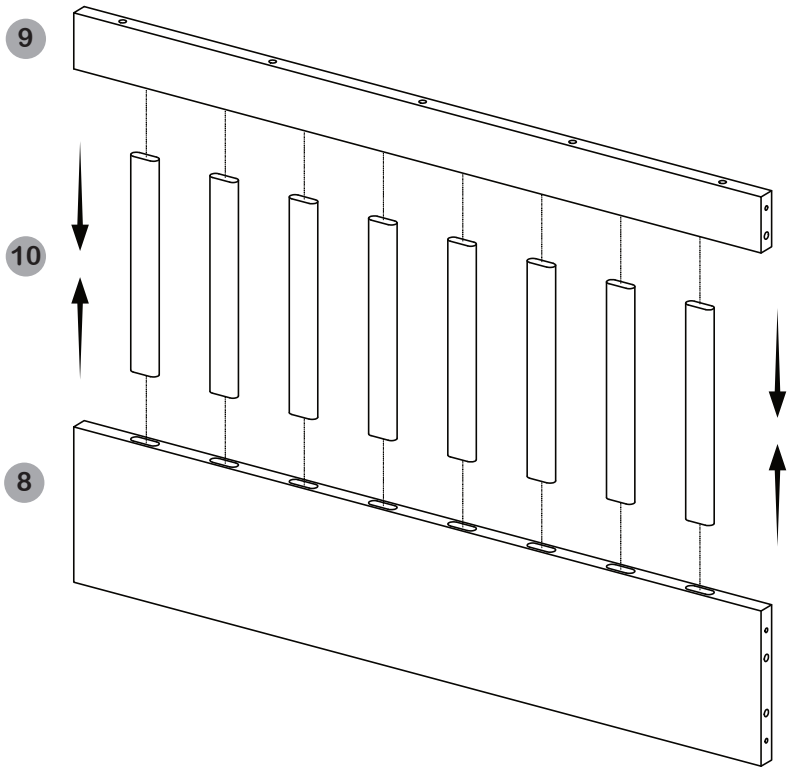

5

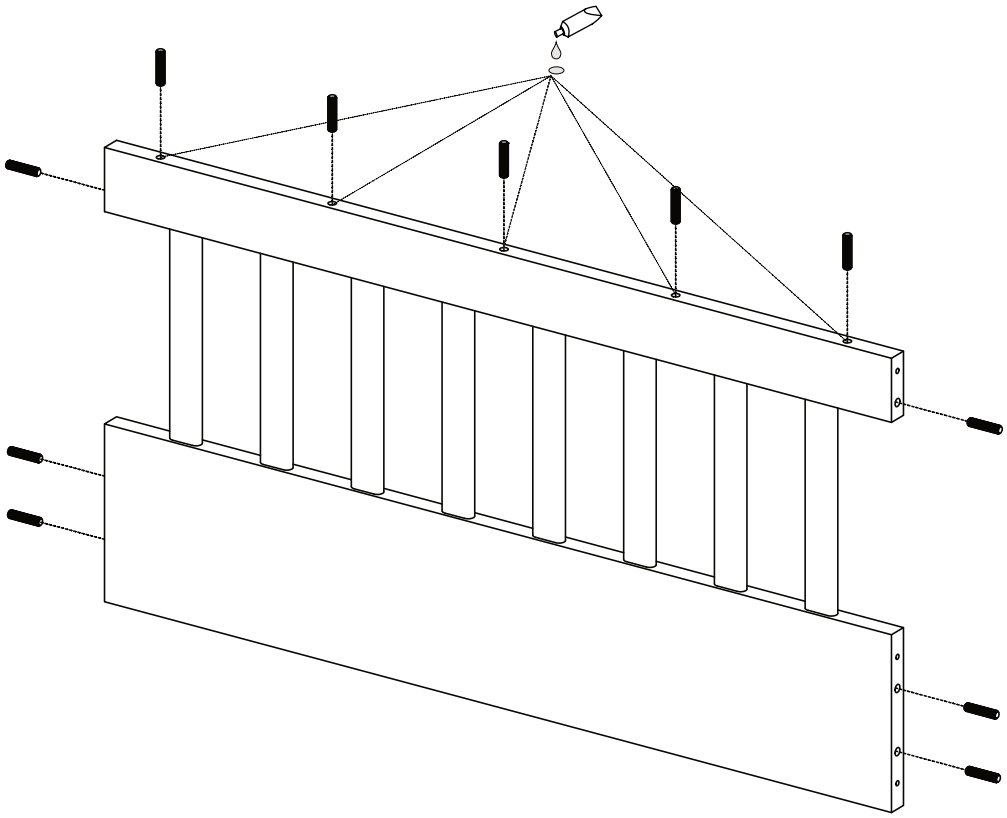

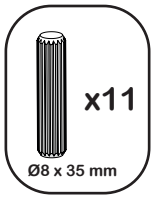

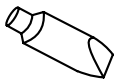

6

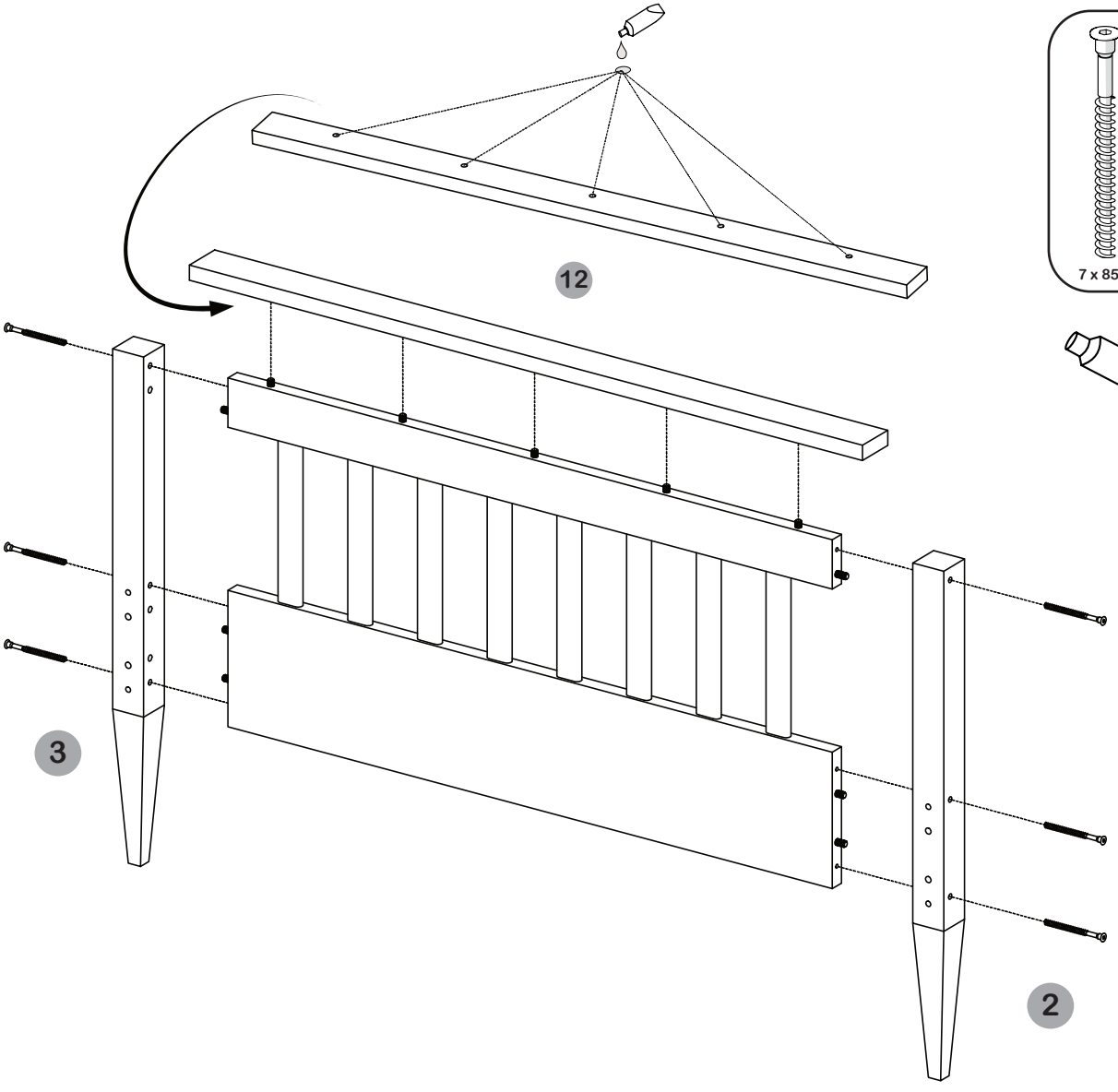

7





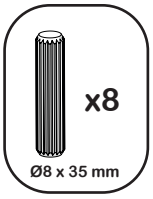

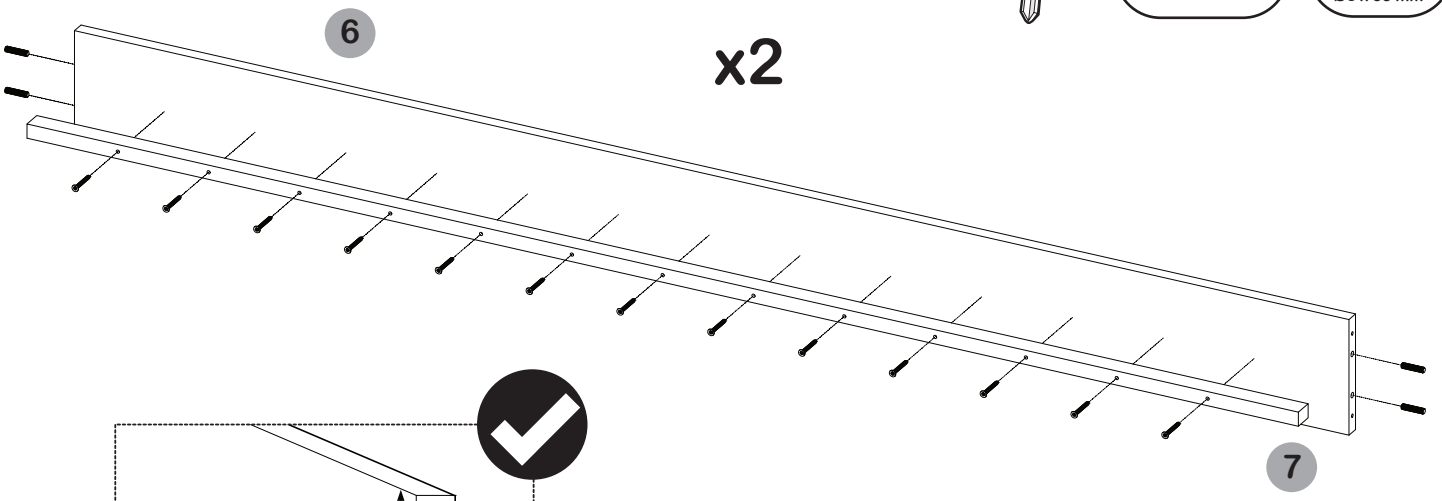

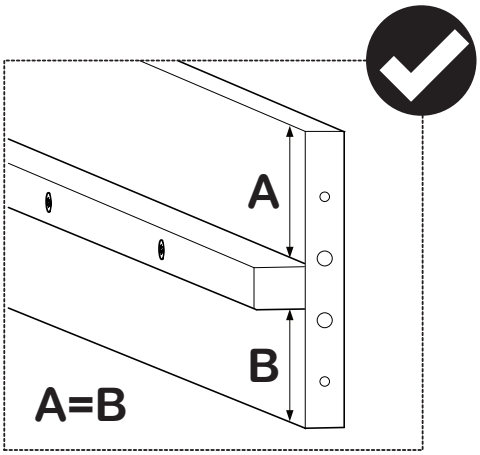

8

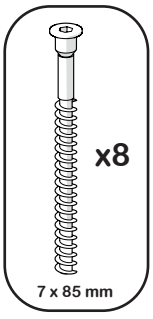

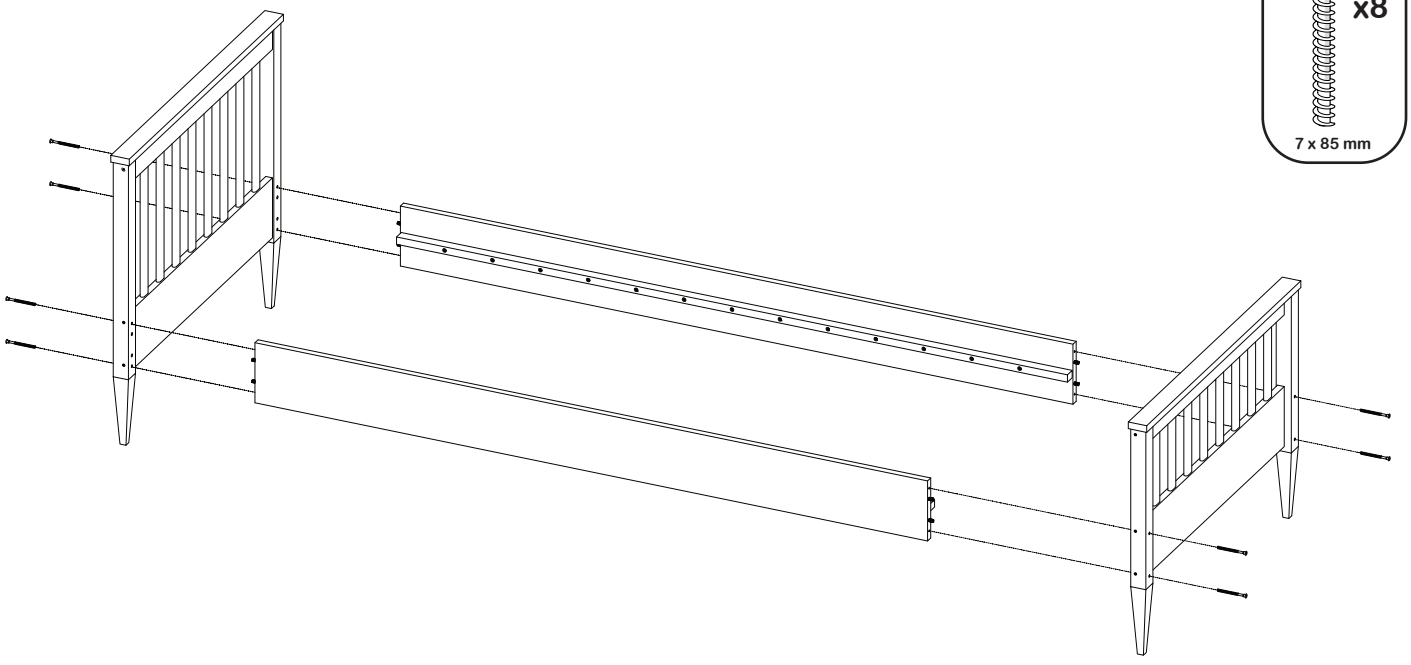

9

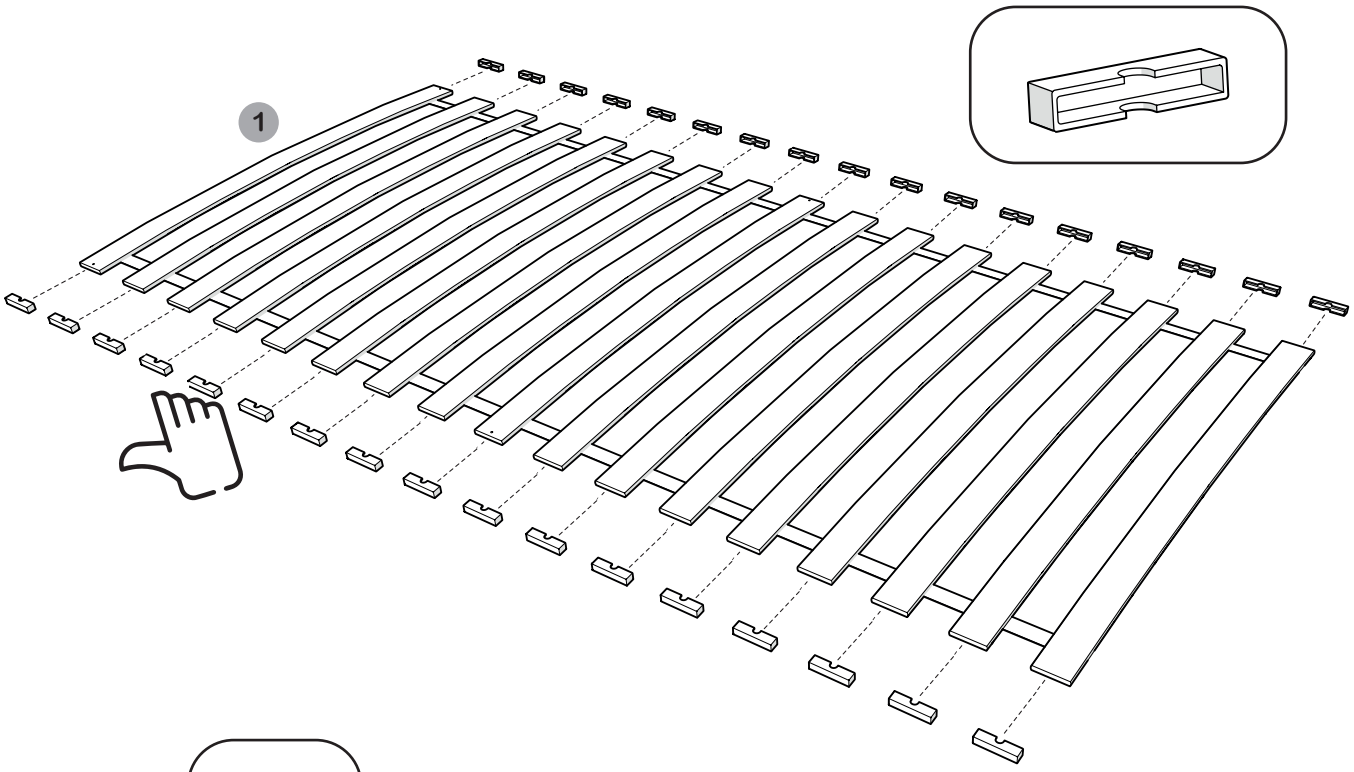



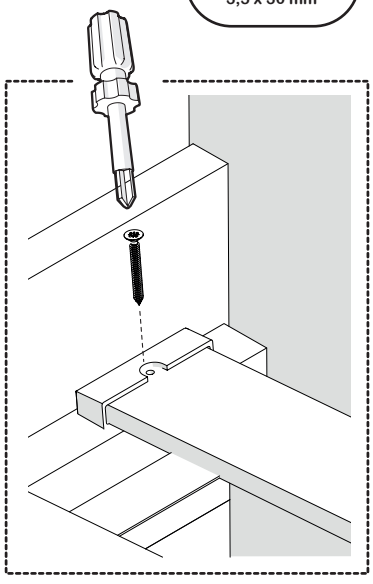

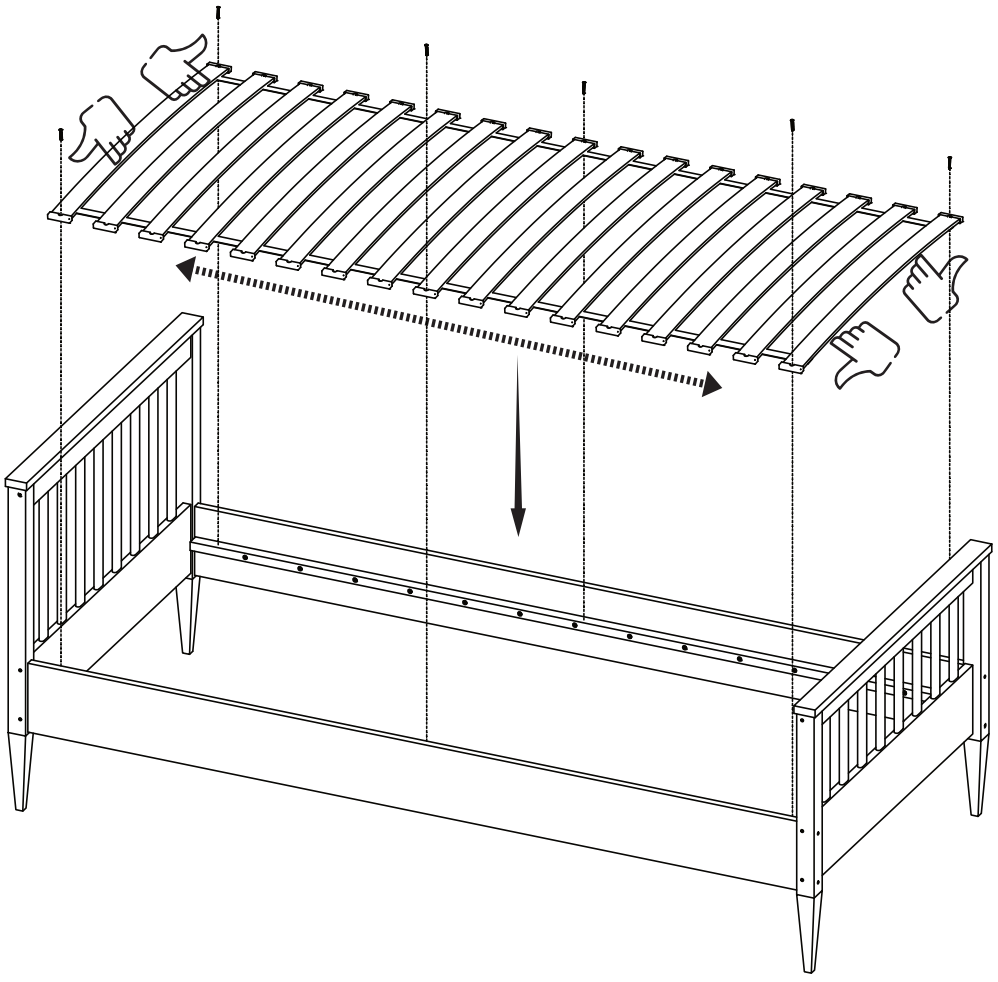



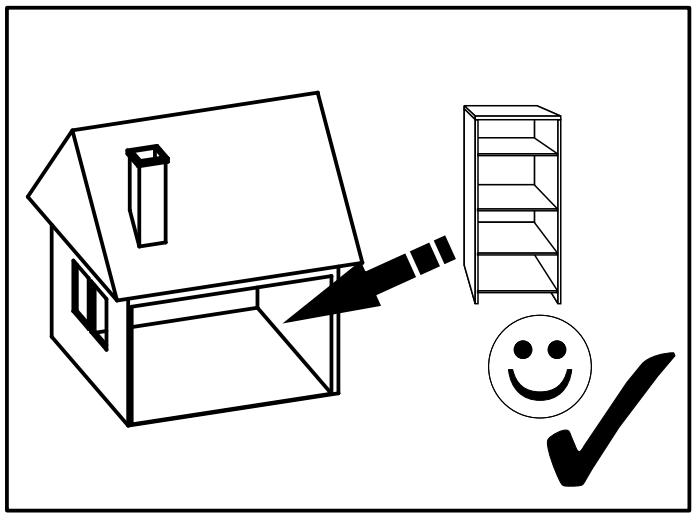

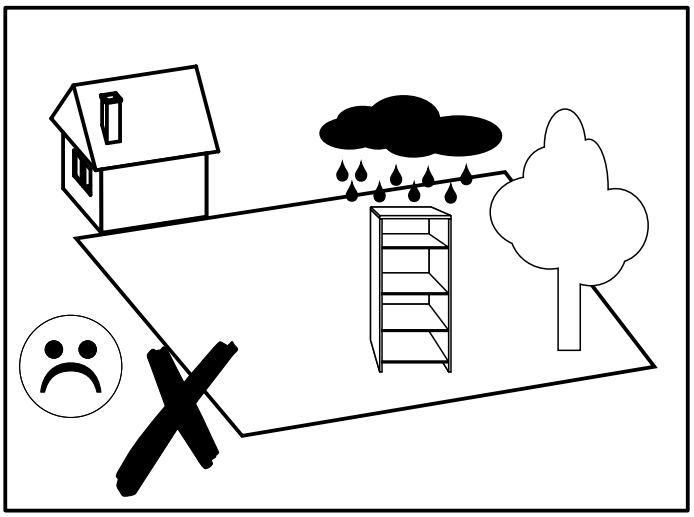

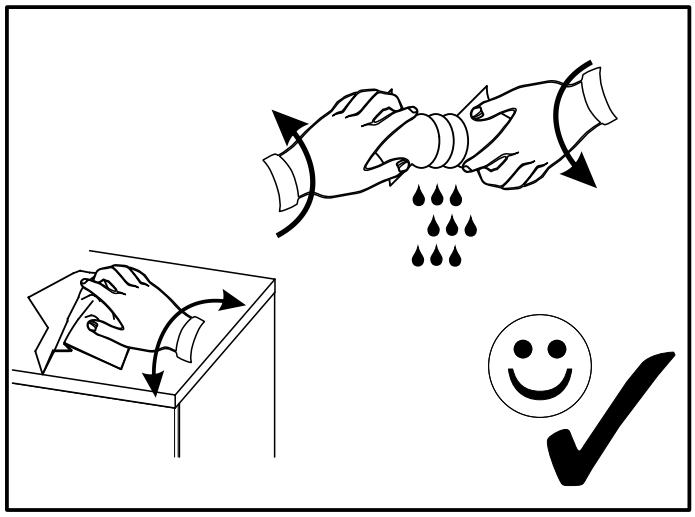

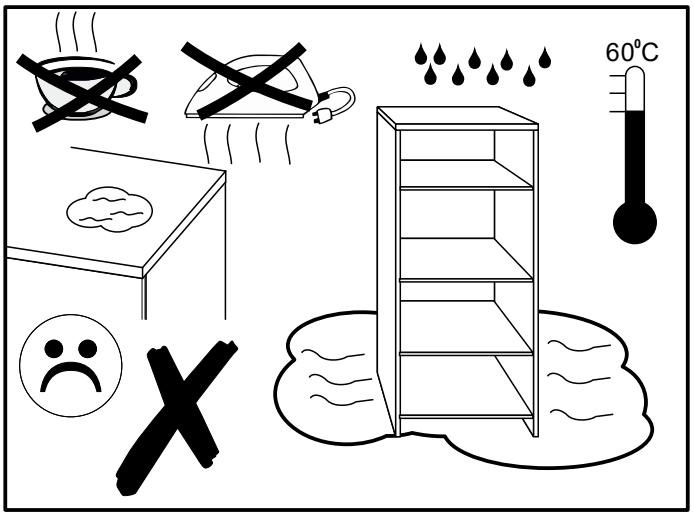
60°C

